

HYUNDAI ELEVATOR CO.,LTD

Head Office and Factories
2091, Gyeongchung-daero, Bubal-eup, Icheon-si, Gyeonggi-do,
17366, Korea

Seoul Office (Global Sales DIV.)
7F, East Bldg., Hyundai Group Bldg.,194, Yulgok-ro, Jongno-gu, Seoul, 03127, Korea
Tel: 82-2-3670-0668 Fax: 82-2-3672-8763-4

SHANGHAI HYUNDAI ELEVATOR CO.,LTD

Head Office & Factory
Liantang Town,Qingpu District,Shanghai,China P.C.:207716
Tel:021-5981-3900 Fax:021-5981-3903

Shanghai Office
12F,[Block A] No.391,Guiping Rd.Xuhui District,Shanghai,China

AFRICA

ALGERIA
T. 213-661-52-89-43
E. howsolpanalgerie@gmail.com

EGYPT
T. 20-1-066628331
E. overseas@iet-hyundaielevator.com

ETHIOPIA
T. 251-911-503-000
E. ieethiopia1@gmail.com

KENYA
T. 254-722-667984
E. pslyall@skymaxenterprise.com

NIGERIA
T. 234-803-7352222
E. nicolas@orionelevators.com

REPUBLIC OF SOUTH AFRICA
T. 27-87-150-3550
E. info@munaca.co.za

SUDAN
T. 249-183-488741
E. amirdafo@danfodio.sd

TUNISIA
T. 216-71-886-980
E. ideal.commercial@gnet.tn

ASIA

BANGLADESH
T. 88-017-13209212
E. zahid@edgeworksbd.com

CAMBODIA
T. 855-23-888-199
E. project@ggear.com.kh

CHINA
[Head Office (Factory)]
T. 86-21-6485-8600
E. 2017407@hdel.co.kr

HONG KONG
T. 86-755-2585-5903
E. hyundaisz@naver.com

INDIA
T. 91-20-3250-2190
E. mmotwani@kcl.kineticindia.com

INDONESIA
T. 62-21-631-8444
E. marketing@superhelindo.co.id

JAPAN
T. 81-3-3436-5117
E. yoshimi-saitoh@daiko-s.co.jp

MALAYSIA
T. 603-6733-2999
E. brian.lee@hem.com.my

MONGOLIA
T. 976-11-7015-3333
E. khishigbaatar@hyundai-elevator.mn

MYANMAR
T. 951-2305336-37
E. info@integral-ltd.com

PAKISTAN
T. 92-21-3432-0601-5
E. iitcpk@gmail.com

PHILIPPINES
T. 632-716-0905
E. hyco@pldtdsl.net

SRILANKA
T. 94-11-2629208
E. rienzie@abansgroup.com

THAILAND
T. 660-2348-8787
E. narongth@loxley.co.th

VIETNAM
T. 84-913-927-601
E. sb.park@hdel.co.kr

EUROPE & CIS

ARMENIA
T. 971-4-440-4927
E. natalya@fd-jcb.am

AZERBAIJAN
T. 994-12-555-1744~46
E. office@astexnika.com

KAZAKHSTAN
T. 7-717-253-8072
E. dmitriy@hdel.kz
T. 7-727-293-8567
E. natalia.ibragimova@technolift.kz

KYRGYZSTAN
T. 996-312-474205
E. a918882@hotmail.com

MAKEDONIA
T. 90-216-488-8000
E. hakan.ek@hmf.com.tr

POLAND
T. 48-61-820-8551
E. maciej.dziurkiewicz@omilifts.com

RUSSIA
[Moscow]
T. 7-495-514-00-32
E. mastersiverlift@gmail.com
[Vladi]
T. 7-423-222-98-73
E. info@dvc.ru

TURKEY
T. 90-216-488-8000
E. hakan.ek@hmf.com.tr

MIDDLE EAST

BAHRAIN
T. 973-17-702-468
E. elevators@nassgroup.com

IRAN
T. 98-21-8869-8727~36
E. jafari_hyundai2015@yahoo.com

IRAQ
T. 964-7901336498
E. arjoon_co@yahoo.com

ISRAEL
T. 972-3-9630000
E. elib@ledico.com

JORDAN
T. 962-79-5526-713
E. m_bseiso@orange.jo

KUWAIT
T. 965-22-457-925
E. info@dealgtc.com

OMAN
T. 968-9286-4334
E. techno.hyundai@gmail.com

QATAR
T. 974-436-6689
E. info@ietg-hyundaielevator.com

SAUDI ARABIA
T. 966-530-970-318
E. waqqas@nsc-ksa.com

SYRIA
T. 963-933-234134
E. terzian@scs-net.org

UAE
T. 971-4-294-4475
E. dubai@bhnoe-hyundai.com

YEMEN
T. 967-1-450556
E. waha62@hotmail.com

NORTH/SOUTH AMERICA

ARGENTINA
T. 5411-3220-2878
5411-4488-1948
E. ogueta@skylift.com.ar

BRAZIL
[Head office (Factory)]
T. 55-51-3037-8686
E. syyun@hdel.co.kr
[Sao paulo (Sales office)]
T. 55-11-5102-3380
E. mrshin@hdel.co.kr

CHILE
T. 56-2-2635-3394
E. lcid@cyce.cl

COLOMBIA
T. 57-1-560-2990
E. agutierrez@solucionesverticales.com.co

COSTA RICA
T. 506-7013-4407
E. cc.elevatec@grupomisol.com

CUBA
T. 537-699-3412
E. habanajdkim@gmail.com

DOMINICAN REPUBLIC
T. 809-566-7474
E. cesar@eleva.com.do

ECUADOR
T. 593-2254-2831
E. hyundai@a-i.com.ec

GUATEMALA
T. 502-2388-0000
E. cd.elevatec@grupomisol.com

MEXICO
T. 52-55-5663-2019
E. yurich@insertechmx.com

PANAMA
T. 507-230-3166
E. asucre@elevadoresdelistmo.com

PERU
T. 51-1-436-1028
E. yhjo7777@gmail.com

VENEZUELA
T. 58-212-232-8263
E. ojssimon@gmail.com

May 2017

We reserve the right to change designs and specifications for the product development without prior notice.



FREIGHT ELEVATORS
AUTOMOBILE ELEVATORS

HYUNDAI ELEVATOR

Moving solutions with safety, reliability and efficiency

There is a reason why Hyundai Elevator is customers' preferred choice

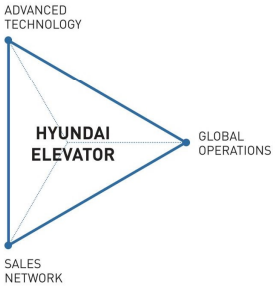



World-class elevator technology

Hyundai Elevator has the world's most advanced high-speed elevator technology. It built Hyundai Asan Tower, in April 2009 to thoroughly evaluate and validate the safety and reliability of its products under conditions that closely replicate those of a high-rise building.

THE EL 1080 high-speed elevator

The world's fastest elevator (1,080 m/min.)

THE EL DUO double-deck elevator

1.8 times more loading capacity through 2 vertically integrated elevators



Production system and sales network that spans across borders

In addition to state-of-the-art production facilities in Korea, Hyundai Elevator built manufacturing facilities in China and Brazil to supply its unparelleled products worldwide. The company strives to better meet the needs of global customers through localization and by maximizing synergy among its 7 overseas subsidiaries and 58 sales networks.

OVERSEAS BRANCHES

CHINA	SHANGHAI HYUNDAI ELEVATOR CO., LTD.
INDONESIA	PT. HYUNDAI ELEVATOR INDONESIA
INDIA	KINTETIC HYUNDAI ELEVATOR & MOVEMENT TECHNOLOGIES LIMITED
MALAYSIA	HYUNDAI ELEVATOR (MALAYSIA) SDN. BHD
BRAZIL	HYUNDAI ELEVADORES DO BRASIL LTDA.
VIETNAM	HYUNDAI THANH CONG ELEVATOR VIETNAM CO., LIMITED
TURKEY	HYUNDAI ELEVATOR (TURKEY) ASANSOR VE SERVIS SAN. VE TIC. A.S.





MANUFACTURING PLANTS

Icheon Headquarters (Icheon, Korea)	- (Factories 1, 2, 3) 46,484 m² state-of-the-art facilities - Production of elevators, automated material handling system, parking systems, platform screen doors (PSD), etc. - Hyundai Asan Tower - Hyundai Customer Care Center (CCC)
Brazil Factory (São Leopoldo, Brazil)	- 13,337 m² state-of-the-art facilities - Production of elevators
China Factory (Shanghai, China)	- 28,716 m² state-of-the-art facilities - Production of elevators and escalators - Elevator test tower (72 m high)



Hyundai's Freight elevators are designed using state-of-the art techlonogy

The product combines sophisticated technologies like the elevator engineering technology, strong dragging system, and high-strength mechanical structure design, can contain large amount of cargoes, can conduct reliable operation under various bad environments, is equipped with the characteristics like high efficiency, reliability, firmness, durability, accurate flat bed, etc., and is widely used in factories, warehouses, shopping malls,etc.





GD (Geared) Freight Elevators

Speed(m/s)	1000	1500	2000	2500	3000	4000	5000	Capacity(kg)
1.0	●	●	●	●	●			
0.5	●	●	●	●	●	●	●	
0.25						●	●	

GL(Gearless) Freight Elevators

Speed(m/s)	1000	1500	2000	2500	Capacity(kg)
1.75	●	●	●		
1.5	●	●	●		
1.0	●	●	●	●	

Freight Elevators (Machine room less)

Speed(m/s)	2000	3000	Capacity(kg)
1.0	●	●	
0.5	●	●	



Hyundai's Automobile elevators

With advanced technology of Variable Voltage Variable Frequency (VVVF), Hyundai automobile elevator can effectively improve the park stability and amenity. Compared with the traditional car ramp, Automobile elevators can save 80% of the building area and greatly improve the efficiency of cars transportation. Automobile elevator as an important vehicle of vertical transport, widely used in car 4S shop, maintenance workshop, roof parking of shopping mall,etc.





Automobile Elevators

Speed(m/s)					
0.5		●	●	●	
		2500	3000	5000	Capacity(kg)

Freight Elevators Car Design



F-2SC0

Ceiling	CD100 (Painted Steel / P017)
Wall	Painted Steel(P017)
Door	Painted Steel(P017)
OPB	OPP-D221B-F
Flooring	Checkered steel plate



F-2SC0

Ceiling	CD100 (Hairline Stainless Steel)
Wall	Hairline Stainless Steel
Door	Hairline Stainless Steel
OPB	OPP-D221B-F
Flooring	Checkered steel plate

Entrance Design



F-2SS0-L

Door	Mirror Stainless Steel
Jamb	JP050(Mirror Stainless Steel)
Indicator	HIP-D221C-F



F-2SS0-R

Door	Painted Steel(P017)
Jamb	JP050 (Painted Steel/P017)
Indicator	HIP-D221C-F



F-2SC0

Door	Hairline Stainless Steel
Jamb	JP050 (Hairline Stainless Steel)
Indicator	HIP-D221C-F



F-3SC0

Door	Hairline Stainless Steel
Jamb	JP050 (Hairline Stainless Steel)
Indicator	HIP-D221C-F

Automobil Elevators Car Design



A-2SC0

Ceiling	CD100(Painted Steel/P003),LED Light
Wall	Painted Steel(P003)
Door	Painted Steel(P003)
OPB	OPP-D221B-F
Flooring	Checkered steel plate



Elevators Signal Fixtures



Optional Color of the Car Door/Car Wall



Above colors are reference only, please in kind prevail.

Floor



Checkered steel plate (Standard)

Square stainless steel (Optional)

Layout Plan of Freight Elevators(Machine Room)

SECTION/HOISTWAY

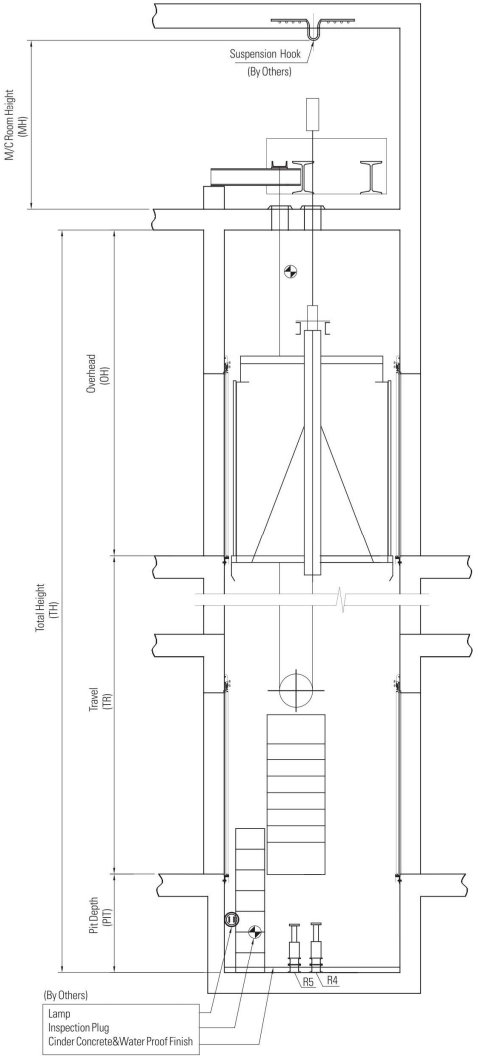

SECTION/MACHINE ROOM

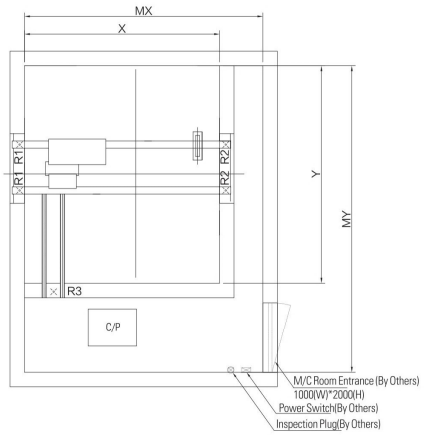

SECTION/MACHINE ROOM

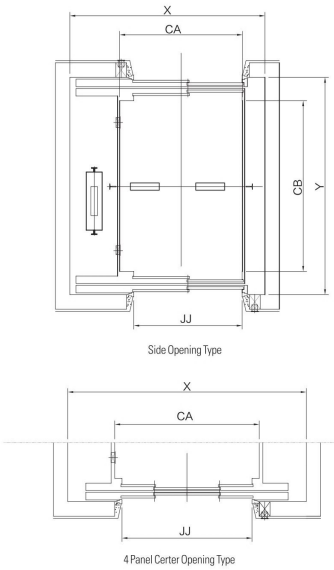

Technical Specification Table

(GD) Freight Elevators Duty Table

Unit: mm

Entrance Type	Capacity (kg)	Roping	Speed (m/s)	Travel Height (m)	Hoistway (mm)	Door Opening Type	Car Internal (mm)	Clear Opening (mm)	Reactions (KN)					Overhead	Pit Depth
					X*Y		CA*CB*CH	JJ*HH	R1	R2	R3	R4	R5	OH	PIT
Standard	1000	1:1	0.5	30	2350*2040	Side Opening	1400*1500*2300	1100*2100	80	55	/	110	75	4350	1500
			1	50											
Double Entrance			0.5	30	2350*2210										
			1	50											
Standard	1500	2:1	0.5	30	2550*2440		1600*1900*2300	1300*2100	109	79	20	126	95	4350	1500
			1	50											
Double Entrance			0.5	30	2550*2610										
			1	50											
Standard	2000	2:1	0.5	30	2700*2840		1700*2300*2300	1500*2100	138	88	24	79*2	118	4350	1500
			1	50											
Double Entrance			0.5	30	2700*3010										
			1	50											
Standard	2500	2:1	0.5	30	3300*2860	4 Panel Center Opening	2000*2300*2300	1800*2100	198	120	26	110*2	160	4400	1500
			1	50										4650	
Double Entrance			0.5	30	3300*3010									4400	
			1	50										4650	
Standard	3000	2:1	0.5	30	3450*3270		2000*2800*2300	2000*2100	222	120	28	160*2	110*2	4400	1500
			1	50										4650	
Double Entrance			0.5	30	3450*3340									4400	
			1	50										4650	
Standard	4000	4:1	0.25	16	3500*4070		2000*3600*2500	2000*2400	238	150	42	170*2	123*2	4800	1800
			0.5	30											
Double Entrance			0.25	16	3500*4140										
			0.5	30											
Standard	5000	4:1	0.25	16	4300*3870		2600*3400*2500	2600*2400	256	150	54	197*2	148*2	4800	1800
			0.5	30											
Double Entrance			0.25	16	4300*3940										
			0.5	30											

(GL) Freight Elevators Duty Table

Unit: mm

Entrance Type	Capacity (kg)	Roping	Speed (m/s)	Travel Height (m)	Hoistway (mm)	Door Opening Type	Car Internal (mm)	Clear Opening (mm)	Reactions (KN)					Overhead	Pit Depth
					X*Y		CA*CB*CH	JJ*HH	R1	R2	R3	R4	R5	OH	PIT
Standard	1000	2:1	1.0	40	2350*2040	Side Opening	1400*1500*2300	1100*2100	94	74	15	95	72	4500	1400
			1.5	60											
			1.75	70											
Double Entrance			1.0	40	2350*2210									4500	1400
			1.5	60											
			1.75	70											
Standard	1500	2:1	1.0	40	2550*2440		1600*1900*2300	1300*2100	167	135	22	122	91	4650	1400
			1.5	60											
			1.75	70											
Double Entrance			1.0	40	2550*2610									4650	1400
			1.5	60											
			1.75	70											
Standard	2000	2:1	1.0	40	2700*2840		1700*2300*2300	1500*2100	190	140	25	120*2	118	4650	1400
			1.5	60											
			1.75	70											
Double Entrance			1.0	40	2700*3010									4650	1400
			1.5	60											
			1.75	70											
Standard	2500	4:1	1.0	40	3250*3060	4 Panel Center Opening	1900*2500*2300	1800*2100	198	160	30	165*2	150	4800	1400
Double Entrance					3250*3210										

Recommended size of Machine Room

Unit:mm

M/C Room Width MX	MX = X+600
M/C Room Depth MY	MY= Y+2000
M/C Room Height MH	MH ⩾ 2500

Notes: 1.CH mentioned above stands for Car Height;
2.If the sizes of the civil engineering are different with the above-mentioned values of our company,our company can conduct the adjustment within the national standard scope, and please consult the Hyundai Company.

Layout Plan of Freight Elevators (Machine room less)

SECTION/HOISTWAY

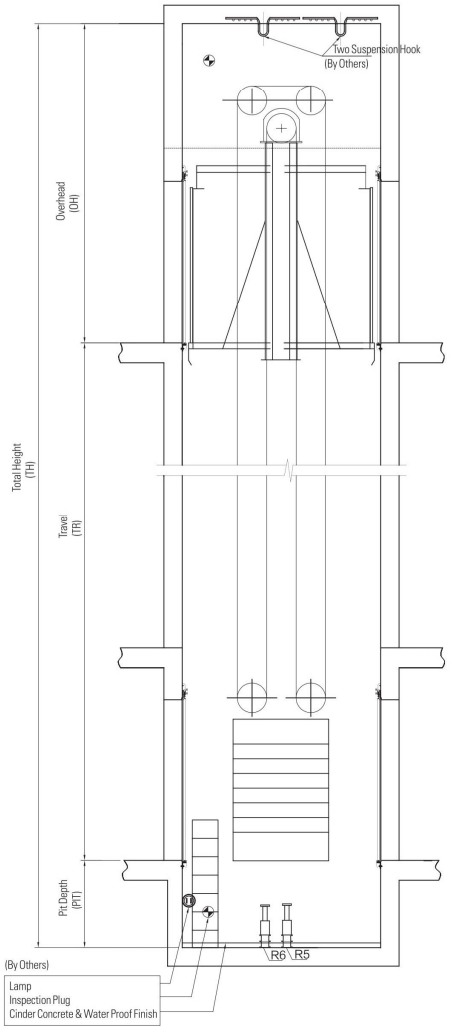

PLAN OF TOP FLOOR

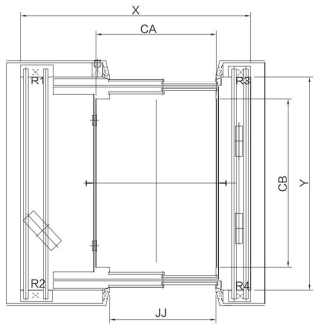

PLAN OF HOISTWAY

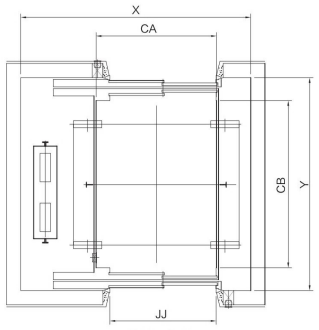

Side Opening Type

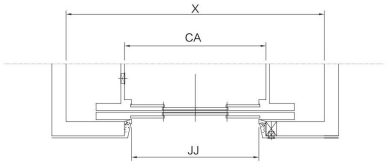

4 Panel Certer Opening Type

Technical Specification Table

Unit: mm

Entrance Type	Capacity (kg)	Roping	Speed (m/s)	Travel Height (m)	Hoistway (mm)	Door Opening Type	Car Internal (mm)	Clear Opening (mm)	Reactions (KN)						Overhead	Pit Depth
					X*Y		CA*CB*CH	JJ*HH	R1	R2	R3	R4	R5	R6	OH	PIT
Standard	2000	4:1	0.5	30	3250*2840	Side Opening	1700*2300*2300	1500*2100	110	140	70	50	60*2	80*2	4800	1600
			1.0	50												
Double Entrance			0.5	30	3250*3010											
			1.0	50												
Standard	3000	4:1	0.5	30	3650*3270	4 Panel Center Opening	2000*2800*2300	2000*2100	130	180	80	55	94*2	124*2	5000	1800
			1.0	50												
Double Entrance			0.5	30	3650*3340											
			1.0	50												

Notes: 1.CH mentioned above stands for Car Height;
2.If the sizes of the civil engineering are different with the above-mentioned values of our company,our company can conduct the adjustment within the national standard scope, and please consult the Hyundai Company.

Layout Plan of Automobile Elevators

SECTION/HOISTWAY

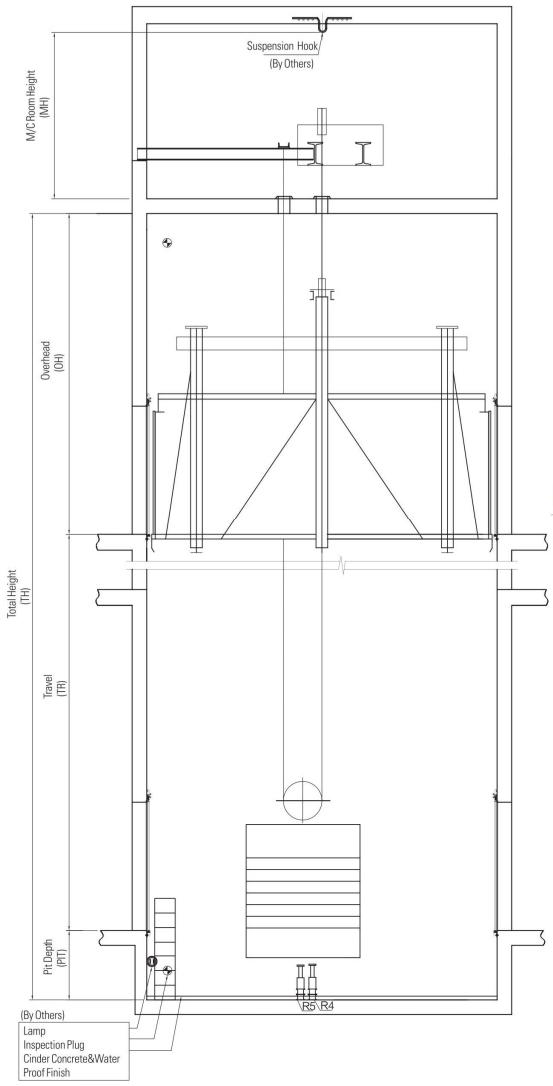

SECTION/MACHINE ROOM

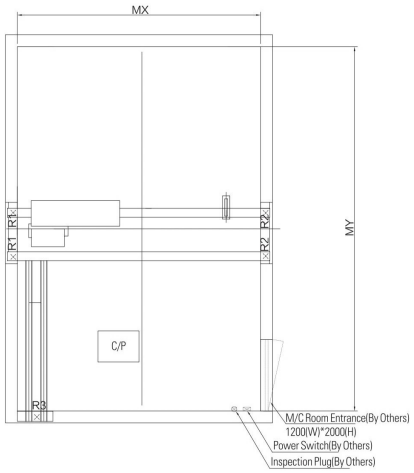

PLAN OF HOISTWAY

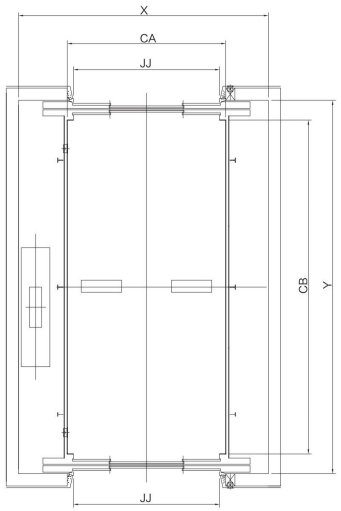

Technical Specification Table

Unit: mm

Entrance Type	Capacity (kg)	Roping	Speed (m/s)	Travel Height (m)	Hoistway (mm)	Door Opening Type	Car Internal (mm)	Clear Opening (mm)	Reactions (KN)					Overhead	Pit Depth
					X*Y		CA*CB*CH	JJ*HH	R1	R2	R3	R4	R5	OH	PIT
Standard	2500	2:1	0.5	30	4100*5700	4 Panel Center Opening	2500*5000*2300	2400*2200	190	110	20	150*2	120*2	5000	1600
Double Entrance					4100*5700		2500*5000*2300								
Standard	3000	2:1	0.5	30	4100*6200		2600*5500*2300	2400*2200	268	150	30	160*2	130*2	5000	1600
Double Entrance					4100*6200		2600*5500*2300								
Standard	5000	2:1	0.5	30	4700*7700		3200*7000*2300	2600*2200	515	220	50	240*2	192*2	5000	1600
Double Entrance					4700*7700		3200*7000*2300								

Notes: 1.CH mentioned above stands for Car Height;
2.The size of Machine Room shouldn't less than hoistway 's;
3.If the sizes of the civil engineering are different with the above-mentioned values of our company,our company can conduct the adjustment within the national standard scope, and please consult the Hyundai Company.

Function Setting

	Features	Description
Standard Function	Cancellation of waiting for closing doors	Under the automatic status and when the door is in the status of complete opening and time-delay period of the door opening, pressing the door closing button can immediately close the door in advance.
	Automatic Elimination of the Reversed Order	When the upward and downward operation is conducted the order opposite to the current operation direction can be eliminated automatically.
	Delayed Protection of the Door Closing of the Car	When the door opening time exceeds the preset time due to the pressed calling button or other factors, the elevators will conduct the forced door closing to respond to the other signals. When the repeated forced door closing is conducted but the elevator cannot be closed tightly, the elevator will stop the operation and open the doors, the internal and external calling signals will automatically cancel, and when the normal closing is monitored by the elevator, the elevator will recover the normal operation.
	Door Opening Protection of the Car	When the elevator doors cannot be fully opened over a predetermined time due to mechanical jam and other causes, the inside and outside signals can be automatically cancelled and the elevator will move to the adjacent floors to open the doors and release the passengers.
	Door Closing Protection of the Car	When the elevator door cannot be fully opened over a predetermined time due to mechanical jam and other causes, the elevator will automatically enter the protection status after repeating to close the doors for three times with no closing signal detected; when the elevator monitors that the doors are normally closed, it will return to normal operation.
	Car Stop with Door Opened	That is parking switch. After the key switch set on the designated floor operates, the elevator will return to the designated floor after replying to all commands, and the energy-saving mode is simultaneously enabled, meanwhile, the light in the car is cut off with parking switch indicator outside the hall lightened up.
	Automatic Parking	When all the elevators of the building, which is in the group control, are in the idle status, they will automatically stop at the different floors of the building to improve the response speed for the calls sent by the elevator group.
	Base Station	For single-deck elevators, the operation base station can be set according to the actual need of the building; if there is no call or command registration within a predetermined time, the car will automatically return to the base, closing doors in the standby mode. Generally, the base station is located at the floor with high traffic flow or at the entrance hall.
	Maintenance for the Car top	The maintenance box is located at the top of the car, which makes the maintenance safer and quicker.
	Automatic Fan and Light Control inside the Car	Without any operating command, the elevator will enter the energy-saving mode within the predetermined time after the elevator door is closed and the light and the automatic fan will also be closed.
	Overload Protection	When the rated loading capacity of the car exceeds the rated allowable load, the overload buzzer will ring to alert overload. At this moment, the overload information will be displayed with doors of the car opened and the elevator cannot start.
	Door-Open & Close Buttons	The micro switch controlling the door opening and closing is provided on the operation panel of the elevator car, to facilitate the passengers to flexibly master the time for opening or closing the doors as needed.
	Separate Control of the Hall and Doors of Car	After statistics, the waiting time for opening the doors caused by the call from the outside hall is longer than that of caused by the command inside the car; thus, the retention time for opening the elevator doors can be independently adjusted in responding to the call and command, to improve the overall operational efficiency.
	Directional Indication outside the Hall and inside the Car	For the convenience of passengers to learn the running direction of the elevator, the arrow-shaped indicators are provided on the operation panel in the car and the calling panel outside the hall, to prompt the running direction.
	Digital Display in the Hall and Car	The landing floor of the elevator can be displayed at any time with 7 segments digital on the operation panel inside the car and the calling box in the hall on each floor, to facilitate passengers to get to know the current running position of the elevator.
	Two-Wire/Four-Wire Communication	Four-wire communication is in common use, as well as the two-wire communication.
	Alarm in the Car	It is used in the particular cases; the passengers can promptly notify the outside through pressing the alarm button in the car.
	Overheating Protection of the Drive Device	Since the temperature in the machine room is too high or due to the heat produced during the operation, the elevator will automatically enter into the protection status when the motor temperature exceeds the preset value. When the elevator stops at the nearest floor, the doors will be opened to safely evacuate the passengers and the lights and automatic fan will be closed; after the temperature is back to normal, the elevator may resume to the normal operation.
	Cancellation of Wrong Command	The registered command can be canceled by continuously pressing this button before the elevator does not start, when it has been registered. After the elevator starts, the registered signal shall not be canceled by the system, in order to ensure the personal safety of the passenger.

	Features	Description
Standard Function	Door Opening outside the Hall	In the process of normal door closing, the calling buttons of the same direction outside the hall and elevator are pressed, the elevator will be reopened.
	Reinitialization Running	After the power supply is back to normal due to the interruption, the position signal of the elevator cannot be retained or the car position cannot be confirmed; the elevator will move to the end station for relocation. After the relocation, the position indicator shows the floor location where the elevator stops, and then the elevator recovers to the normal operation.
	Terminal Floor Protection	When the elevator runs to the terminal floor, if the running speed does not reduce to the predetermined value, the system will force it to slow down, in order to protect the safety operation of the elevator.
	Torque Compensation when Starting	In order to get better comfort when the elevator starts, the system will calculate the load in the car and optimize it through the torque compensation when it starts.
	Emergency Light in the Car	The emergency light device provided in the car shall be enabled in case of power failure.
	Door-Open & Close Button Lamps	The button lamp can be lighted up simultaneously when the door-open and close buttons are pressed, to prompt the successful reply.
	Driver Operation	Through operating the switch inside the operation box, the driver operation status can be reached and the driver can manage the number of passengers, call response outside the hall and the operations of the door opening/closing.
	Emergency Fire Operation	After receiving the fire signal when the fire occurs, the system will cancel all commands and calling signals, and drive the elevator back to the fire floor directly; the elevator doors will be opened to evacuate the passengers and the firemen will immediately arrive. After the elevator successfully land in the base station, the control system will give the successful signal to the fire control center.

	Features	Description
Optional Function	Full-Load Bypass	When the load in the car reaches the predetermined value of the full load, that is to enter the full-load bypass status, the elevator will be no longer make response to the hall call, but directly reply the command inside the life car, until it reaches the designated floor.
	Door Open Hold Button	When the door open time is required to be extended in case that more passengers enter the car, the door open hold button on the operation panel can be pressed. As for the group control system, when an elevator enters the door open holding status, the system will automatically transfer its hall call to the other elevator.
	Independent Service	In order to meet the special needs of customers, the independent service status is designed; in the independent service, the elevator will be no longer to reply the hall call signal and the door opening and closing, as well as the operation shall be controlled manually.
	Car Arrival Chime	The arrival chime is set on the car top. When the elevator reaches the floor stop, the bell will ring clearly to prompt the passengers for arrival.
	Parallel Function	This function is used when two elevators with the same model are controlled in group, enabling the elevator group to select the most appropriate response, to avoid the repeat stop of the elevator and shorten the waiting time for the passenger, which can improve the operational efficiency.
	Blackout Emergency Evacuation Device	When the elevator suddenly stop in case of the power failure during the normal operation of the elevator, the device will act promptly and the drive elevator slowly runs to the level position; after that, the voice prompt information will be gave out and the doors will also be opened to evacuate the passengers.
	Driver Bypass	In the driver status, the NSB button in the operation box is pressed and the elevator will directly move to the target floor when it does not respond to the hall call.
	Emergency fireman's operation	When preset key switch of the car interior is activated,the elevator will cancel all hall signals and only response to car interior calls for fire-extinguishing coordination with firemen. This function need to be used in conjunction with fire elevator.
	Automatic Rebalancing	When the error between the car sill and landing sill exceeds the certain value due to the load variation caused by the passenger flow, the elevator will automatically perform the rebalancing, enabling the car to return to the correct level position.

Note: 1. When the lift height of the double gate or the single gate exceeds 5 meters, the non-standard configuration is met.